Drive adapter

Standard configurations and
machine specific executions upon request
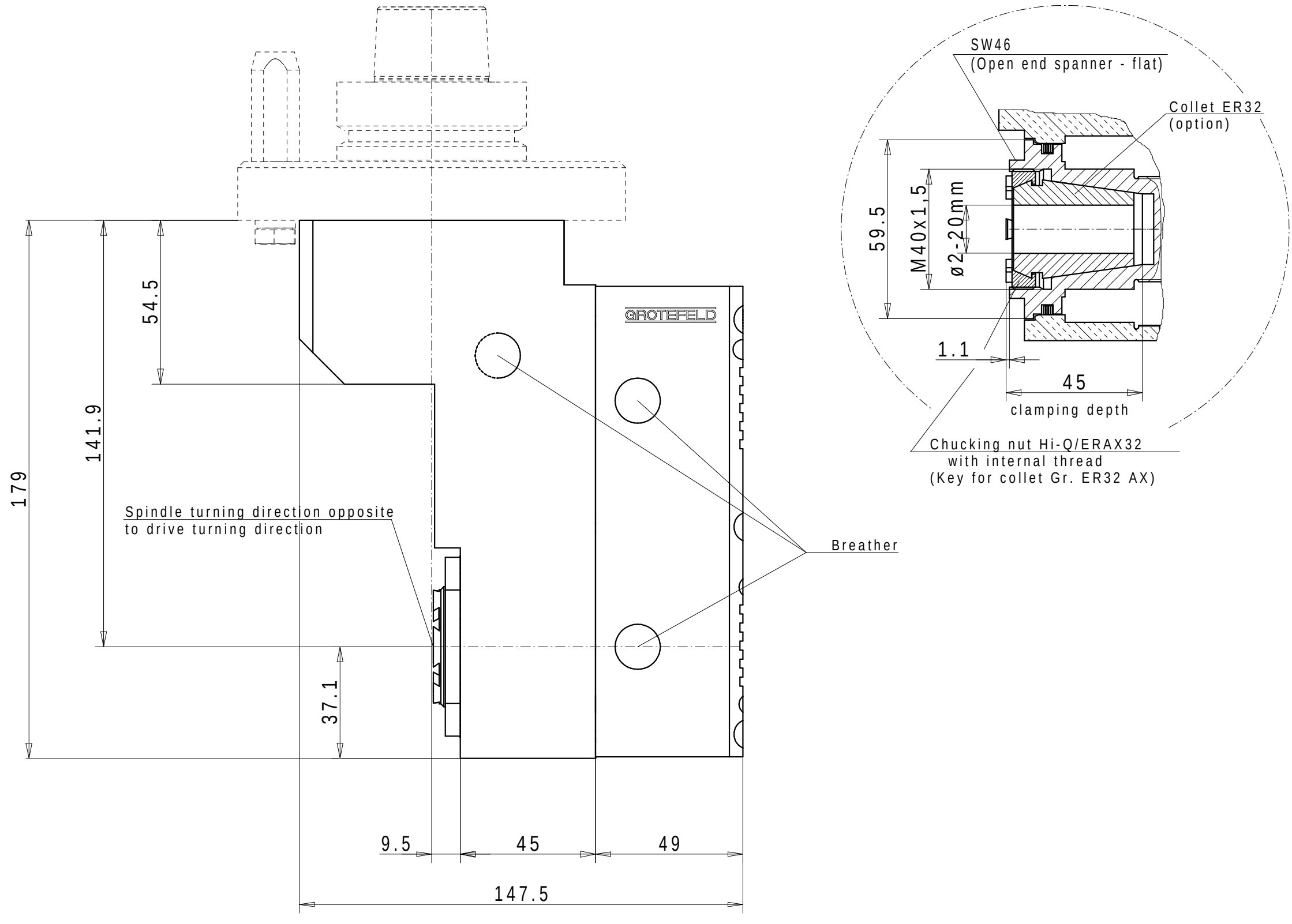
Collet receptacle Hi-Q/ERAX 32 with internal thread