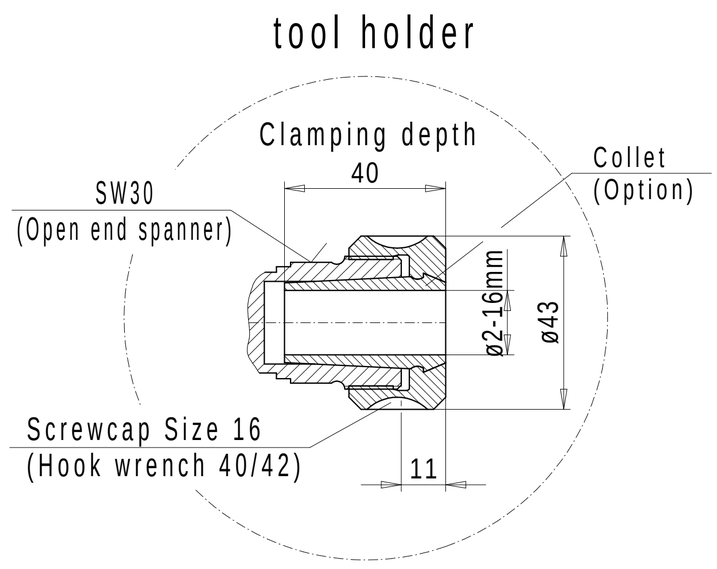
tool holder
Clamping depth
40
SW30
(Open end spanner)
Collet
(Option)
ø2-16mm
ø43
Screwcap Size 16
(Hook wrench 40/42)
11

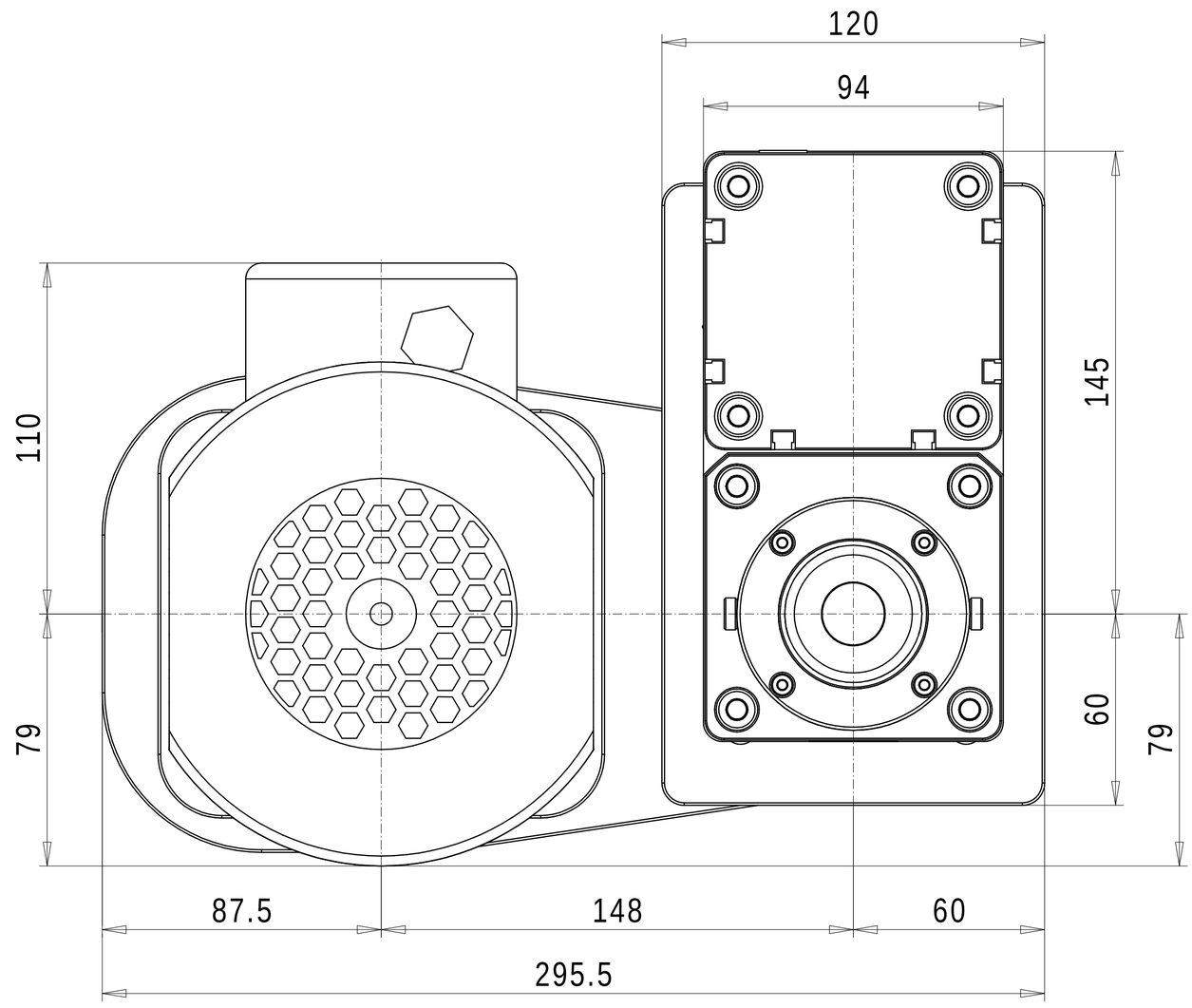
120
94
110
145
79
60
79
87.5
148
60
295.5

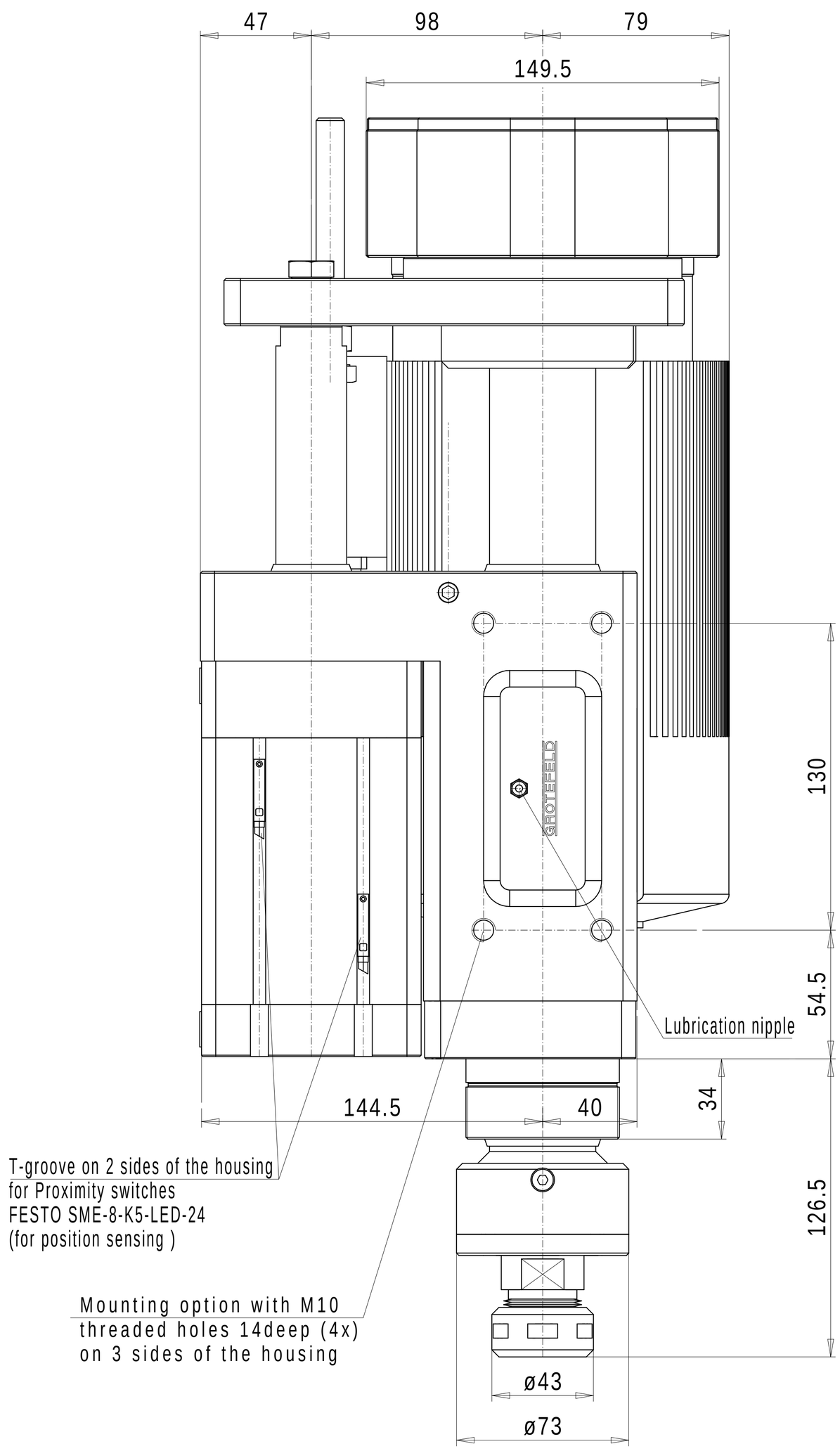
47
98
79
149.5
130
54.5
Lubrication nipple
34
144.5
40
126.5
T-groove on 2 sides of the housing
for Proximity switches
FESTO SME-8-K5-LED-24
(for position sensing)
Mounting option with M10
threaded holes 14deep (4x)
on 3 sides of the housing
ø43
ø73
GROTEFELD

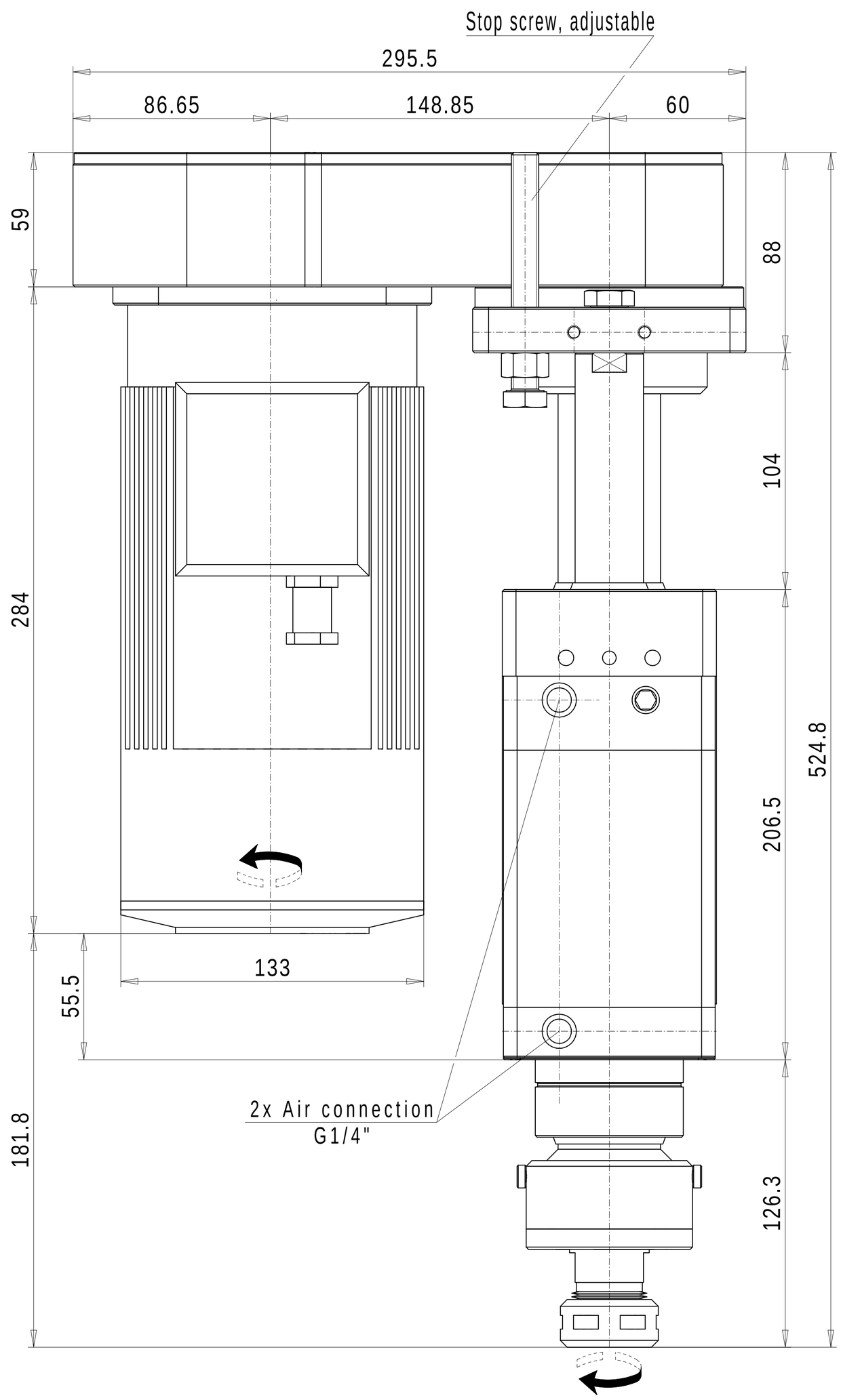
Stop screw, adjustable
295.5
86.65
148.85
60
59
88
104
284
524.8
206.5
133
55.5
2x Air connection
G1/4"
181.8
126.3