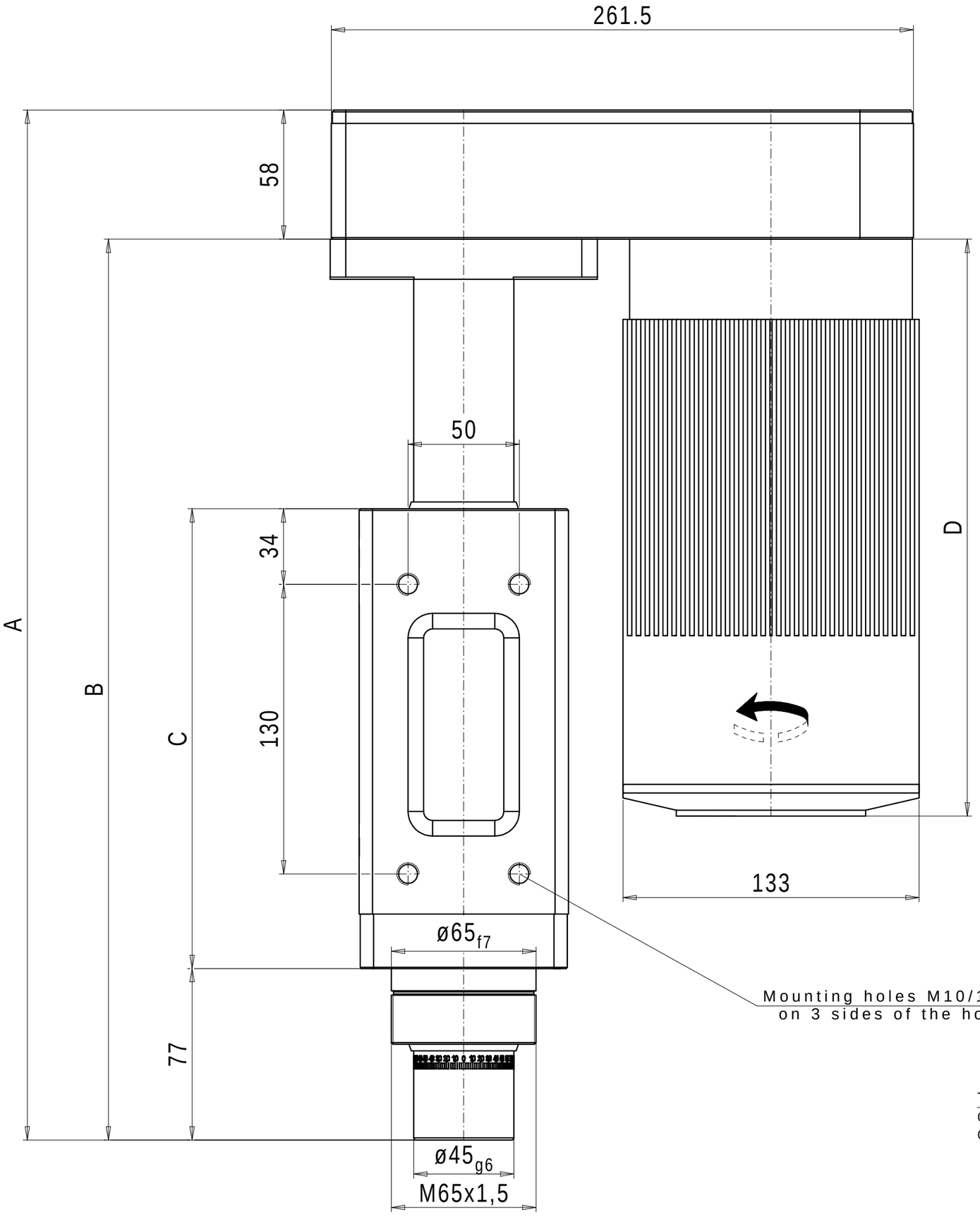

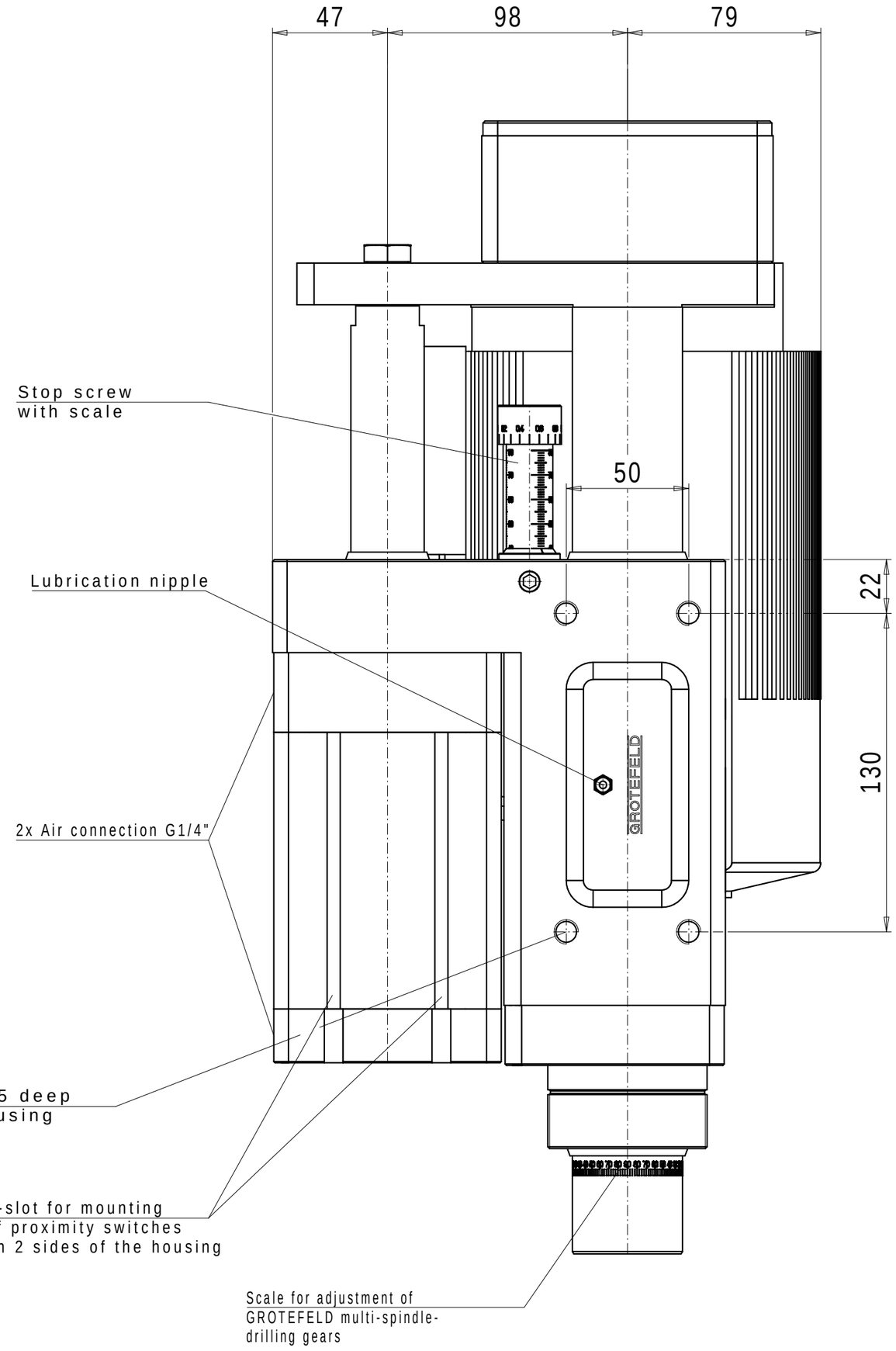

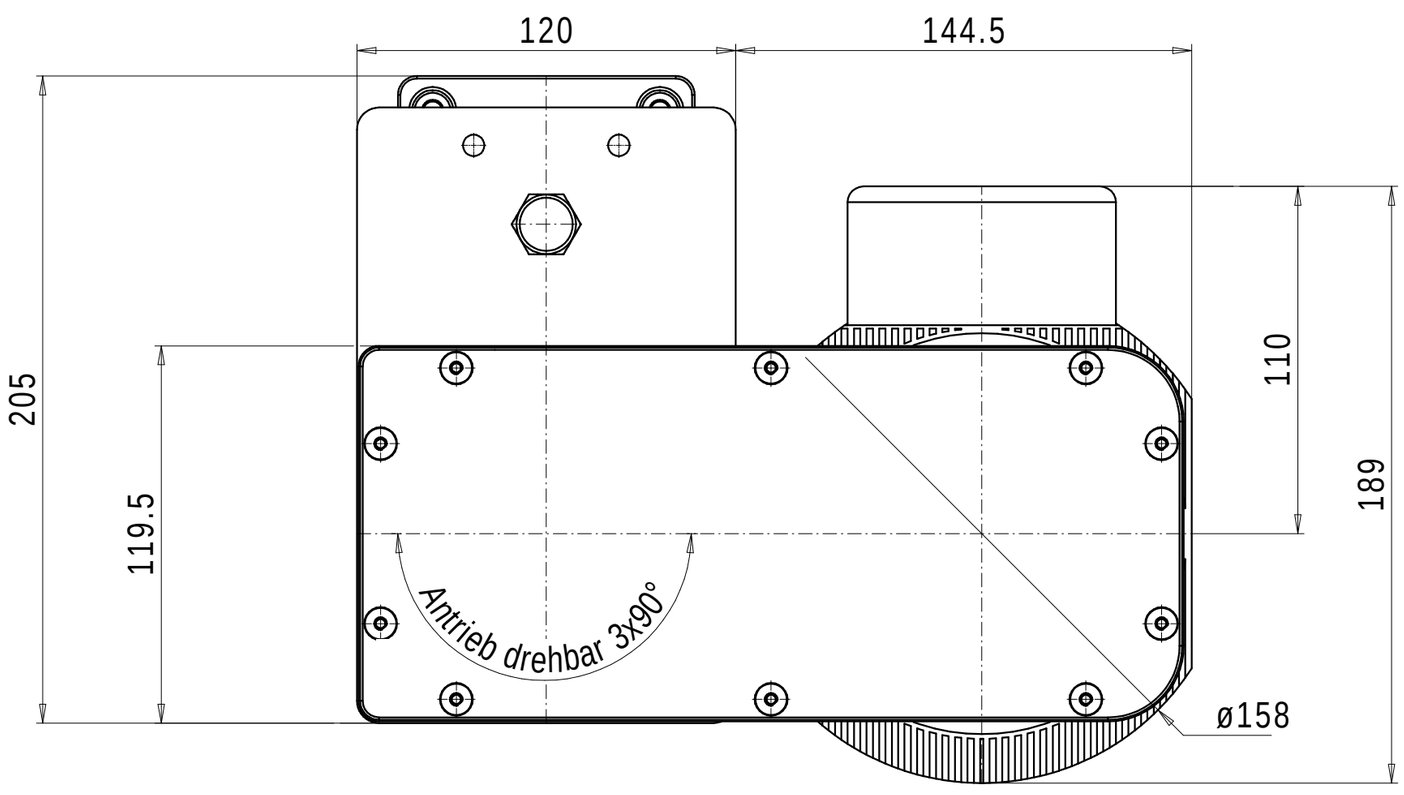

Dimensions				
Version	**A**	**B**	**C**	**D**
080 Hub / 1,70 kW	462,5	404,5	206,5	259
100 Hub / 1,70 kW	502,5	444,5	226,5	259
150 Hub / 1,70 kW	602,5	544,5	276,5	259
200 Hub / 1,70 kW	702,5	644,5	326,5	259
080 Hub / 2,20 kW	462,5	404,5	206,5	276
100 Hub / 2,20 kW	502,5	444,5	226,5	276
150 Hub / 2,20 kW	602,5	544,5	276,5	276
200 Hub / 2,20 kW	702,5	644,5	326,5	276

Feed force	2565 N at 6 bar
Air consumption 080mm stroke	5,23 l per stroke at 6 bar
Air consumption 100mm stroke	6,53 l per stroke at 6 bar
Air consumption 150mm stroke	9,80 l per stroke at 6 bar
Air consumption 200mm stroke	13,08 l per stroke at 6 bar